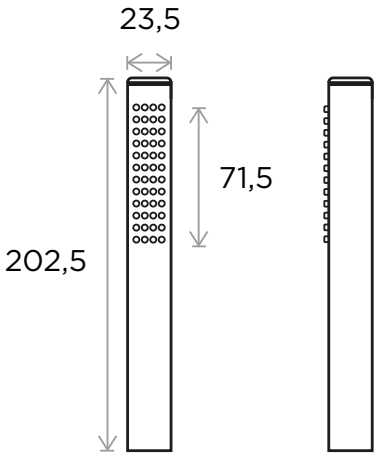

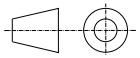

WWW.THISISWW.COM

COLLECTION	PRODUCT	SIZES	DESCRIPTION
Wellness / Shower Controls	H/S Square	(all measurements in mm)	Flow Rate 1.5gpm at 60 psi In Accordance with ASME 112 .18.1